COMPUTING CRAFT

manufacturing cob structures using robotically controlled 3d printing

Project Time frame
Start: 1 January 2018
End: 30 June 2019

CARDIFF UNIVERSITY / PRIFYSGOL CAERDYDD
RESEARCH WITH PLYMOUTH UNIVERSITY
connected everything.

Cob mixing

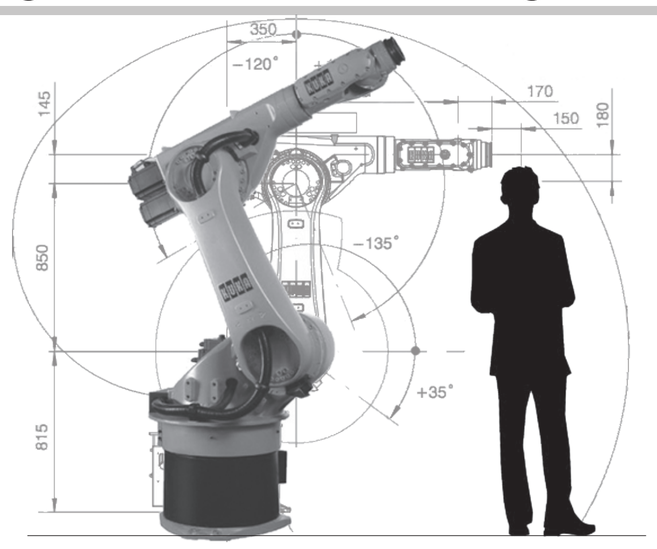

Cob Scaled 3D printing

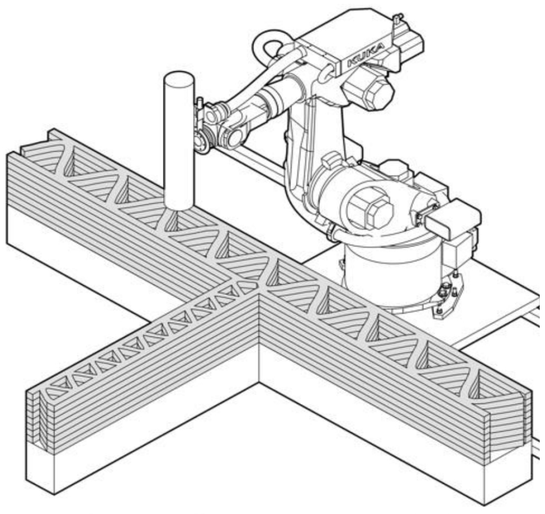

Cob 1.1 wall prototype 3D printing

Subsoil (with clay)

40% Subsoil

+

Straw

1% Straw

+

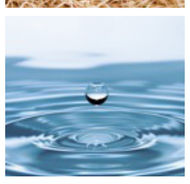

Water

20% Water

+

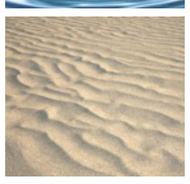

Sand

8% Ball Clay + 7% China Clay + 26% Sand

=

Lime (occasionally)

Cob suitable for Robotic 3D printing

Main Cob ingredients

Mixing proportion developed by the design team using a 'monitored' trial and error methodology.

This project characterizes fabrication procedures for robotically supported 3D printing using cob. The investigation is being conducted in four stages:

1. Describe the current knowledge base of craft-based cob-construction and the potential routes to digitalization.
2. Conduct initial feasibility tests through small-scale modeling with a robotic arm and clay extrusion systems.
3. Identify key challenges for a real-scale feasibility study (the building of a wall).
4. Conduct a full-scale feasibility test for the robotic manufacturing of a cob building element (building a wall) and test building systems (for example, foundation and window requirements) and material properties (for example, building performance associated with various material mix ratios and design opportunities).

Industrial Partners: Building Design Partnership Ltd., IMAKR Ltd. and Kevin McCabe Ltd.

Robotic 2.5D printing

Robotic 3D printing with a mold

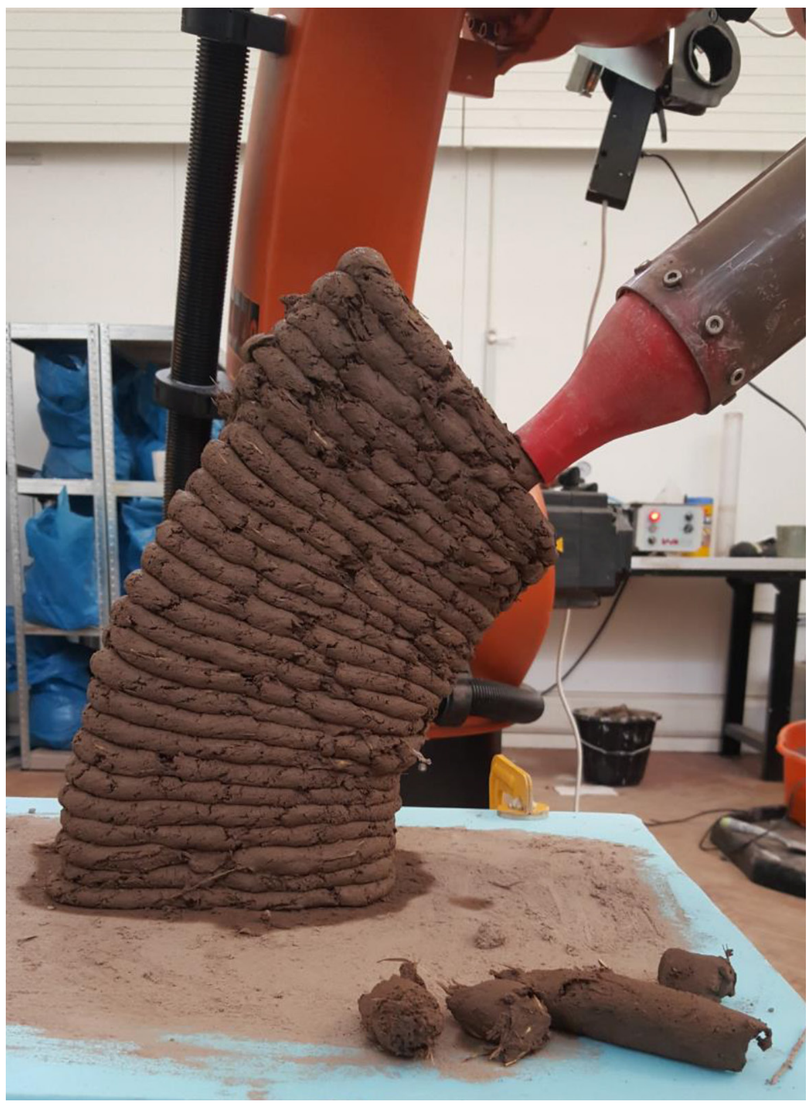

Robotic 3D printing

The project is the first to adopt a cross-disciplinary approach to translating the craft-based process of cob construction into a digital and automated process. The knowledge acquired through this project will be applicable to the 3D printing of other non-uniform clay-based materials. This will be of relevance to constructive processes used in developing countries and remote locations and will, therefore, optimize building methods under challenging conditions such as post-disaster recovery.

Craft-based traditions of building with cob have developed throughout the world, with a strong cob-construction tradition in south-west England and France. Specific traditions of cob-construction have arisen both in response to particular geological and climatic conditions, which generate differing mix-ratios and, therefore, material properties, and local workforce conditions. It has proven ability to produce a high quality result which satisfies building regulations.

Exhibition at Cardiff University

Cob mechanical testing

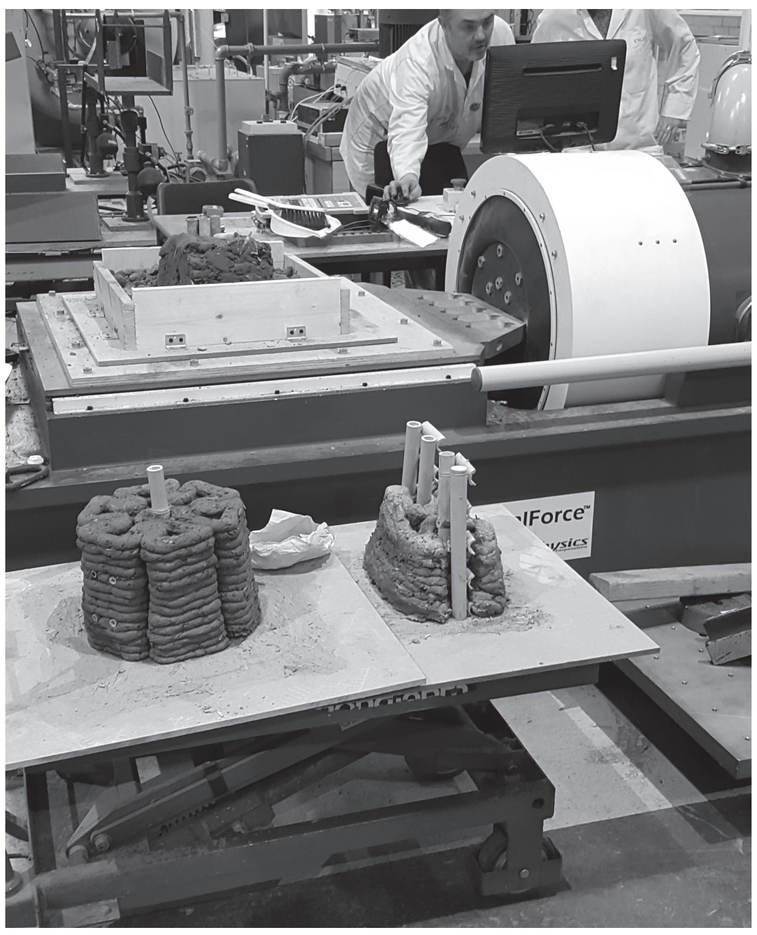

Dr. Wassim Jabi

Dr. Alejandro Veliz Reyes

Dr. Aikaterini Chatzivasileiadi

Dr. Nicholas Mario Wardhana

Mohamed Gomaa

Acknowledgments;
Anas Lila
Lina Ahmad